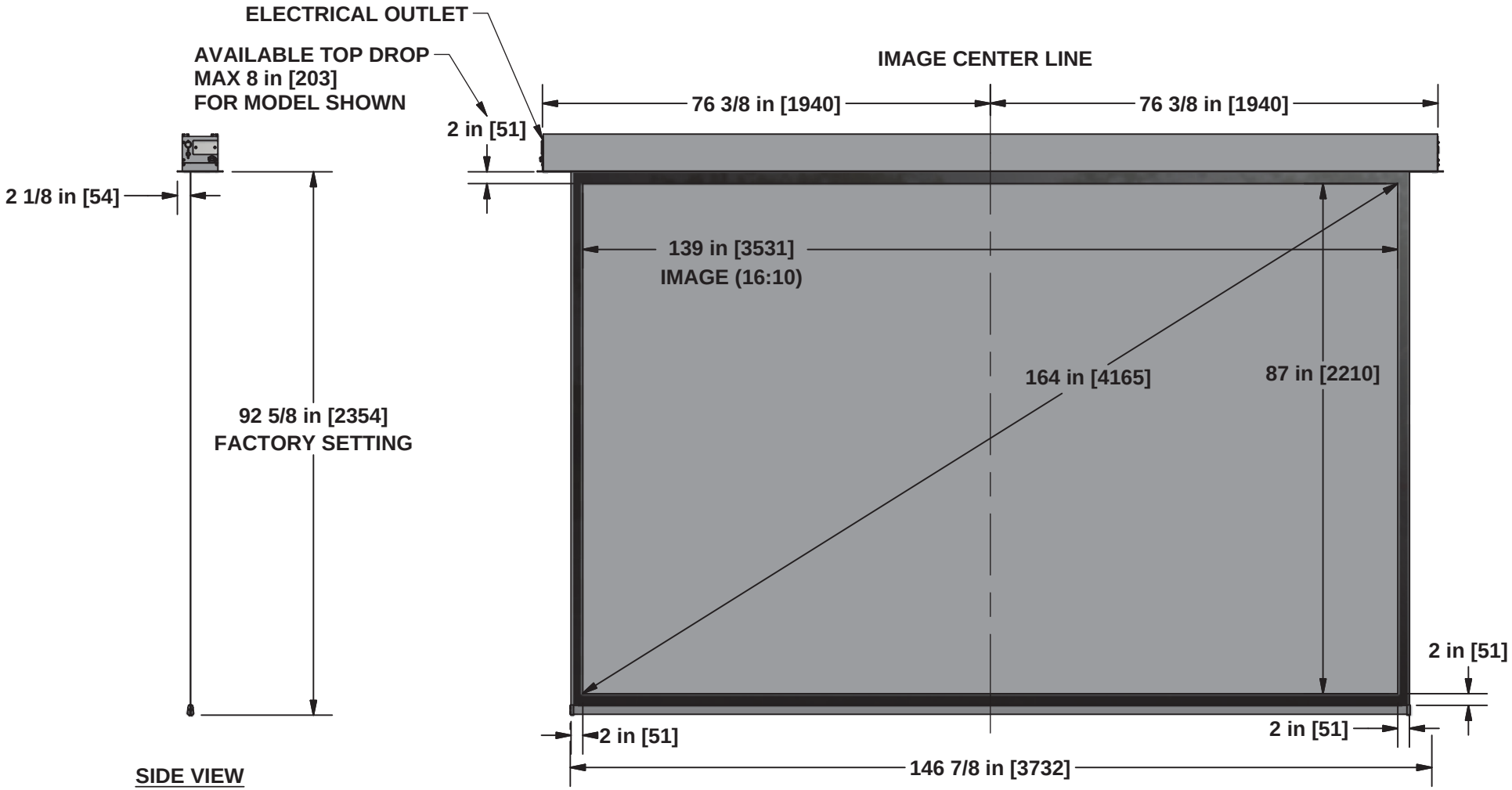

NOTE: **DARK COLORS HAVE BEEN LIGHTENED FOR CLARITY PURPOSES**

RESTRICTION: The information contained in the proposal is confidential and proprietary to Stewart Filmscreen Corporation, shall not be disclosed beyond the vendor company, and shall not be duplicated, used, or disclosed inwhole or in part for any purpose except to evaluate this proposal.

DIMENSIONS ARE **Inches [mm]**	DRAWN BY: Engineering	**Stewart** FILMSCREEN
TOLERANCES: +/- 1/8 in (UNLESS OTHERWISE SPECIFIED)	DRAWING TYPE: Typical	1161 W. Sepulveda Blvd., Torrance, CA 90502 Customer Care (800) 762-4999 Fax (310) 326-6870
APPROXIMATE SCREEN WEIGHT: 70 LBS	CREATION DATE: 8/18/15	TITLE: CIMA NON-TENSIONED ABOVE CEILING
APPROXIMATE SHIPPING WEIGHT: 158 LBS		
MODEL #: CINTAC164DEST10W-2-2-2		
CASE COLOR: White	SIZE: A / SHEET: 1 OF 6	PART NO.: 0095X / REV.

THIS DOCUMENT IS PROPRIETARY PROPERTY OF STEWART FILMSCREEN CORPORATION AND SHALL NOT BE DUPLICATED OR DISCLOSED WITHOUT WRITTEN PERMISSION
(C) STEWART FILMSCREEN CORPORATION 2011

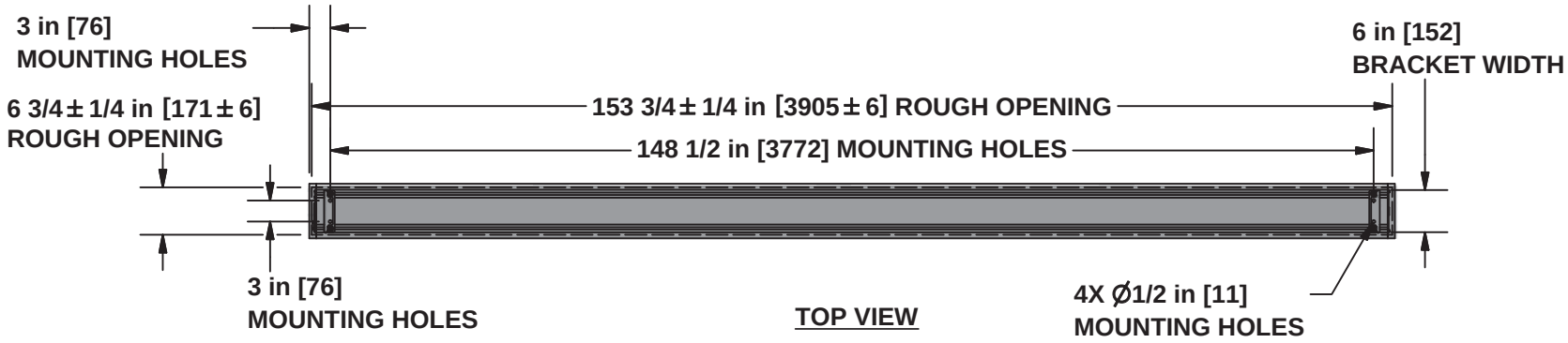

TOP VIEW

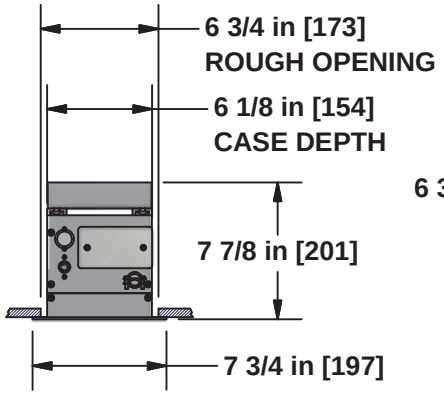

SIDE VIEW
(NOT TO SCALE)

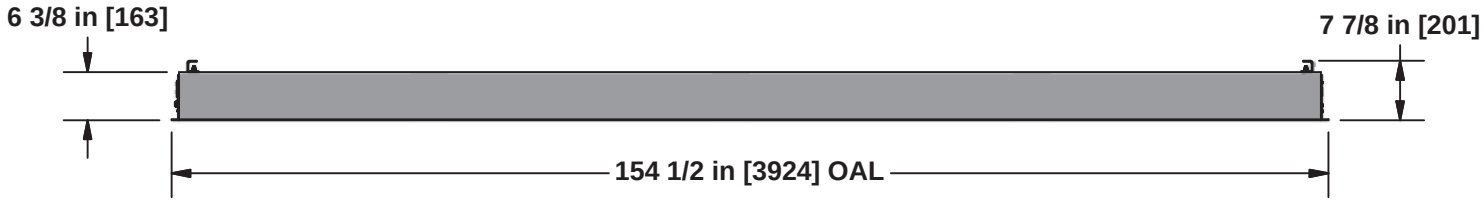

FRONT VIEW

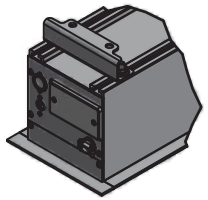

ISOMETRIC VIEW

MOUNTING BRACKET
STANDARD

DIMENSIONS ARE **Inches [mm]**	DRAWN BY: Engineering	**Stewart** FILMSCREEN 1161 W. Sepulveda Blvd., Torrance, CA 90502 Customer Care (800) 762-4999 Fax (310) 326-6870
TOLERANCES: +/- 1/8 in (UNLESS OTHERWISE SPECIFIED)	DRAWING TYPE: Typical	
APPROXIMATE SCREEN WEIGHT: 70 LBS	CREATION DATE: 8/18/15	TITLE: CIMA NON-TENSIONED ABOVE CEILING
APPROXIMATE SHIPPING WEIGHT: 158 LBS		
MODEL #: CINTAC164DEST10W-2-2-2		
CASE COLOR: White	SIZE: A / SHEET: 2 OF 6	PART NO.: 0095X / REV.

RESTRICTION: The information contained in the proposal is confidential and proprietary to Stewart Filmscreen Corporation, shall not be disclosed beyond the vendor company, and shall not be duplicated, used, or disclosed inwhole or in part for any purpose except to evaluate this proposal.

THIS DOCUMENT IS PROPRIETARY PROPERTY OF STEWART FILMSCREEN CORPORATION AND SHALL NOT BE DUPLICATED OR DISCLOSED WITHOUT WRITTEN PERMISSION
(C) STEWART FILMSCREEN CORPORATION 2011

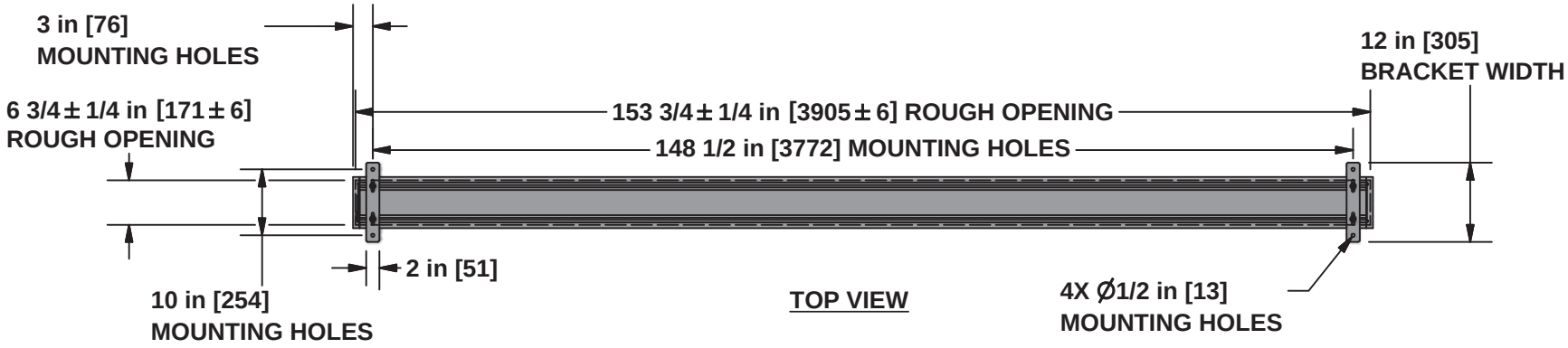

TOP VIEW

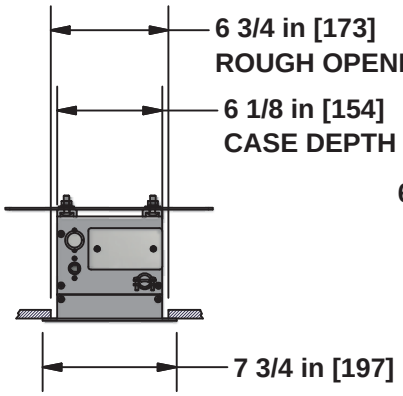

SIDE VIEW
(NOT TO SCALE)

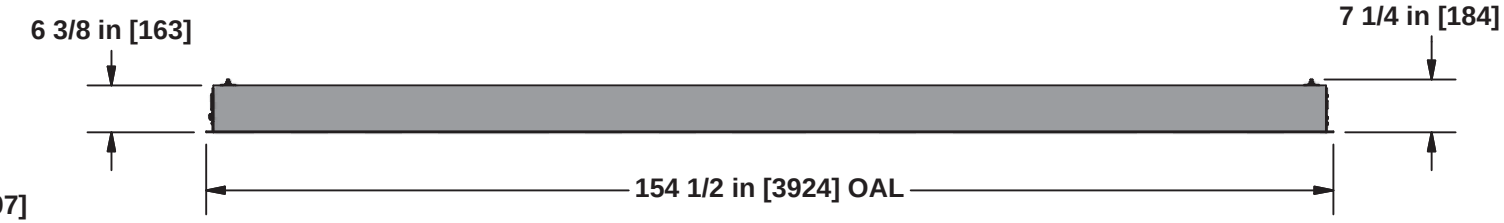

FRONT VIEW

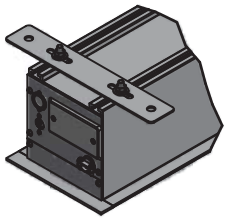

ISOMETRIC VIEW

MOUNTING BRACKET
OPTIONAL

DIMENSIONS ARE **Inches [mm]**	DRAWN BY: Engineering	**Stewart** FILMSCREEN 1161 W. Sepulveda Blvd., Torrance, CA 90502 Customer Care (800) 762-4999 Fax (310) 326-6870
TOLERANCES: +/- 1/8 in (UNLESS OTHERWISE SPECIFIED)	DRAWING TYPE: Typical	
APPROXIMATE SCREEN WEIGHT: 70 LBS	CREATION DATE: 8/18/15	TITLE: CIMA NON-TENSIONED ABOVE CEILING
APPROXIMATE SHIPPING WEIGHT: 158 LBS		
MODEL #: CINTAC164DEST10W-2-2-2		
CASE COLOR: White	SIZE: A / SHEET: 3 OF 6	PART NO.: 0095X / REV.

RESTRICTION: The information contained in the proposal is confidential and proprietary to Stewart Filmscreen Corporation, shall not be disclosed beyond the vendor company, and shall not be duplicated, used, or disclosed inwhole or in part for any purpose except to evaluate this proposal.

THIS DOCUMENT IS PROPRIETARY PROPERTY OF STEWART FILMSCREEN CORPORATION AND SHALL NOT BE DUPLICATED OR DISCLOSED WITHOUT WRITTEN PERMISSION
(C) STEWART FILMSCREEN CORPORATION 2011

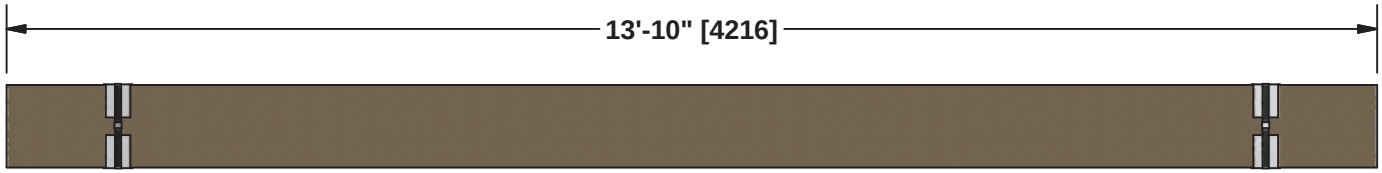

TOP VIEW

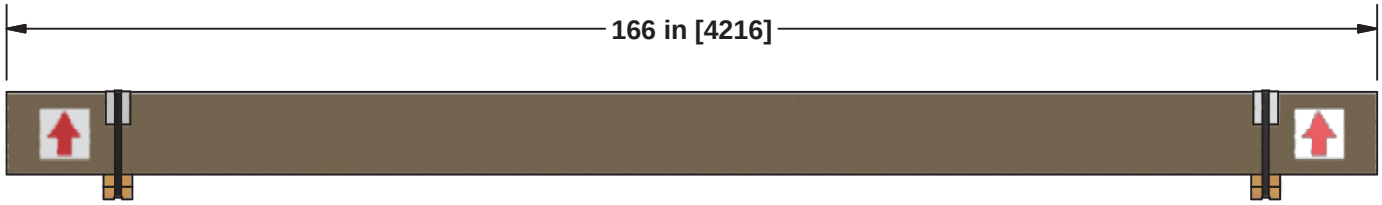

FRONT VIEW

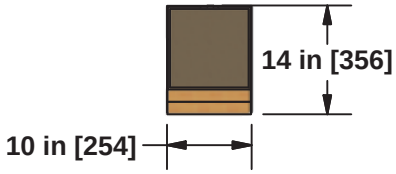

SIDE VIEW

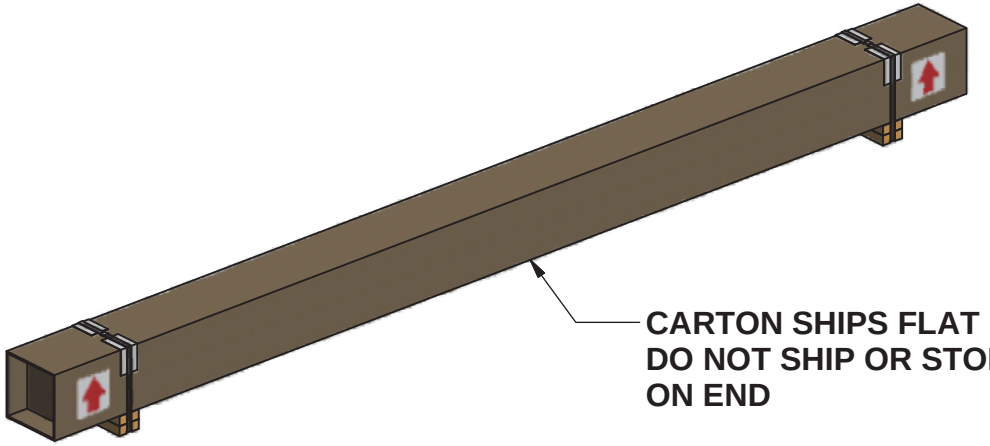

CARTON SHIPS FLAT DO NOT SHIP OR STORE ON END

RESTRICTION: The information contained in the proposal is confidential and proprietary to Stewart Filmscreen Corporation, shall not be disclosed beyond the vendor company, and shall not be duplicated, used, or disclosed inwhole or in part for any purpose except to evaluate this proposal.

DIMENSIONS ARE **Inches [mm]**	DRAWN BY: Engineering	**Stewart** FILMSCREEN 1161 W. Sepulveda Blvd., Torrance, CA 90502 Customer Care (800) 762-4999 Fax (310) 326-6870
TOLERANCES: +/- 1/8 in (UNLESS OTHERWISE SPECIFIED)	DRAWING TYPE: Typical	
APPROXIMATE SCREEN WEIGHT: 70 LBS	CREATION DATE: 8/18/15	TITLE: CIMA NON-TENSIONED ABOVE CEILING
APPROXIMATE SHIPPING WEIGHT: 158 LBS		
MODEL #: CINTAC164DEST10W-2-2-2		
CASE COLOR: White	SIZE: A / SHEET: 4 OF 6	PART NO.: 0095X / REV.

Z:\Inventor Reference Folder\0095X CIMA NT AC Typical\0095X CIMA NT AC Typical.idw

THIS DOCUMENT IS PROPRIETARY PROPERTY OF STEWART FILMSCREEN CORPORATION AND SHALL NOT BE DUPLICATED OR DISCLOSED WITHOUT WRITTEN PERMISSION
(C) STEWART FILMSCREEN CORPORATION 2011

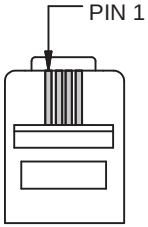

4 PIN:

PIN	SIGNAL
1	COMMON
2	LV1
3	LV2
4	STI

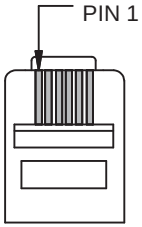

6 PIN:

PIN	SIGNAL
1	NOT USED
2	COMMON
3	LV1
4	LV2
5	STI
6	NOT USED

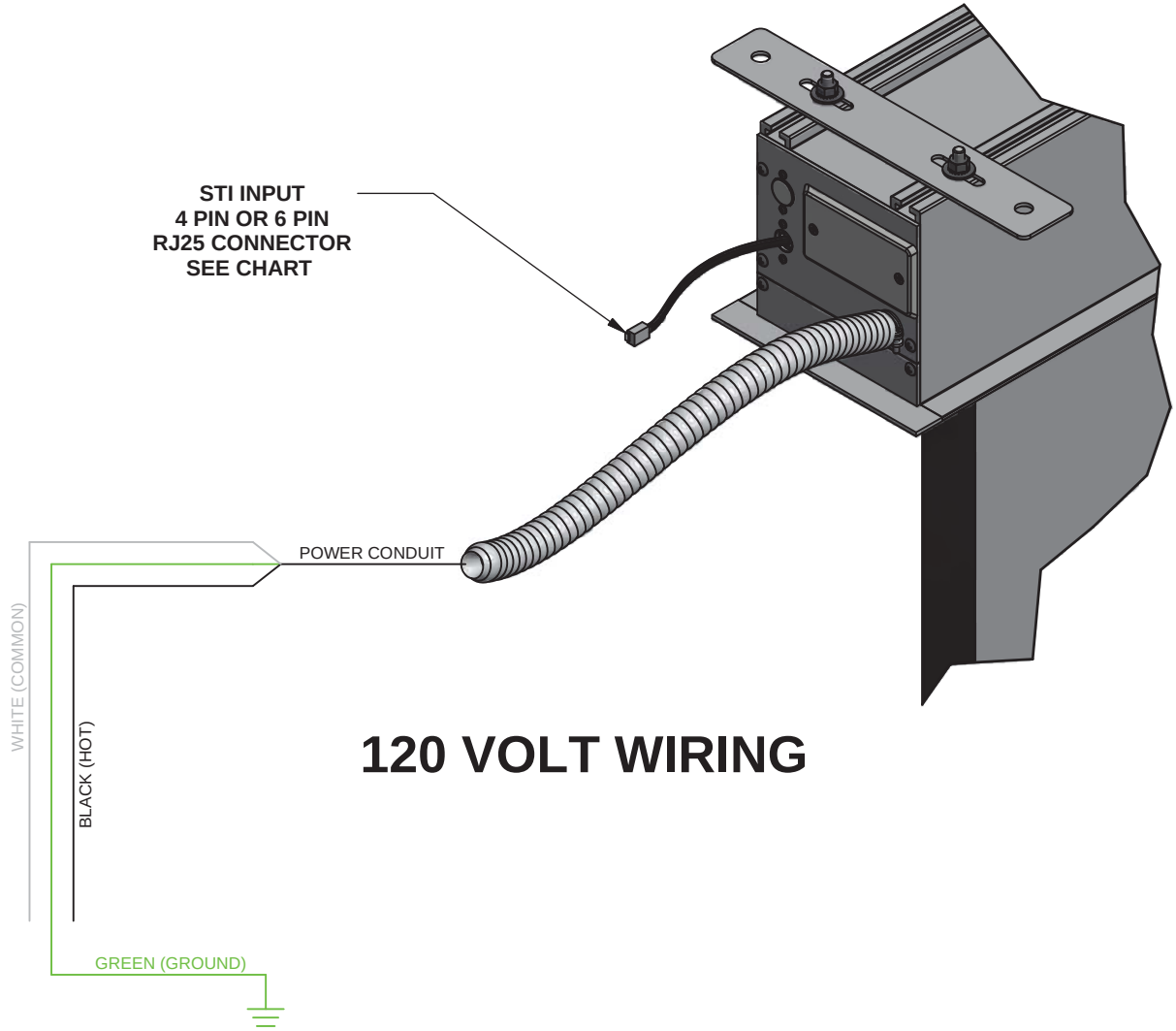

120 VOLT WIRING

DIMENSIONS ARE **Inches [mm]**	DRAWN BY: Engineering	**Stewart** FILMSCREEN 1161 W. Sepulveda Blvd., Torrance, CA 90502 Customer Care (800) 762-4999 Fax (310) 326-6870
TOLERANCES: +/- 1/8 in (UNLESS OTHERWISE SPECIFIED)	DRAWING TYPE: Typical	
APPROXIMATE SCREEN WEIGHT: 70 LBS	CREATION DATE: 8/18/15	TITLE: CIMA NON-TENSIONED ABOVE CEILING
APPROXIMATE SHIPPING WEIGHT: 158 LBS		
MODEL #: CINTAC164DEST10W-2-2-2		
CASE COLOR: White	SIZE: A / SHEET: 5 OF 6	PART NO.: 0095X / REV.

RESTRICTION: The information contained in the proposal is confidential and proprietary to Stewart Filmscreen Corporation, shall not be disclosed beyond the vendor company, and shall not be duplicated, used, or disclosed inwhole or in part for any purpose except to evaluate this proposal.

THIS DOCUMENT IS PROPRIETARY PROPERTY OF STEWART FILMSCREEN CORPORATION AND SHALL NOT BE DUPLICATED OR DISCLOSED WITHOUT WRITTEN PERMISSION
(C) STEWART FILMSCREEN CORPORATION 2011

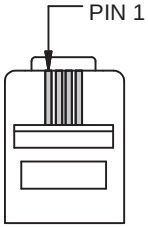

4 PIN:

PIN	SIGNAL
1	COMMON
2	LV1
3	LV2
4	STI

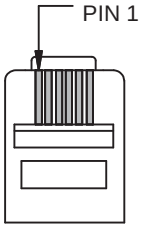

6 PIN:

PIN	SIGNAL
1	NOT USED
2	COMMON
3	LV1
4	LV2
5	STI
6	NOT USED

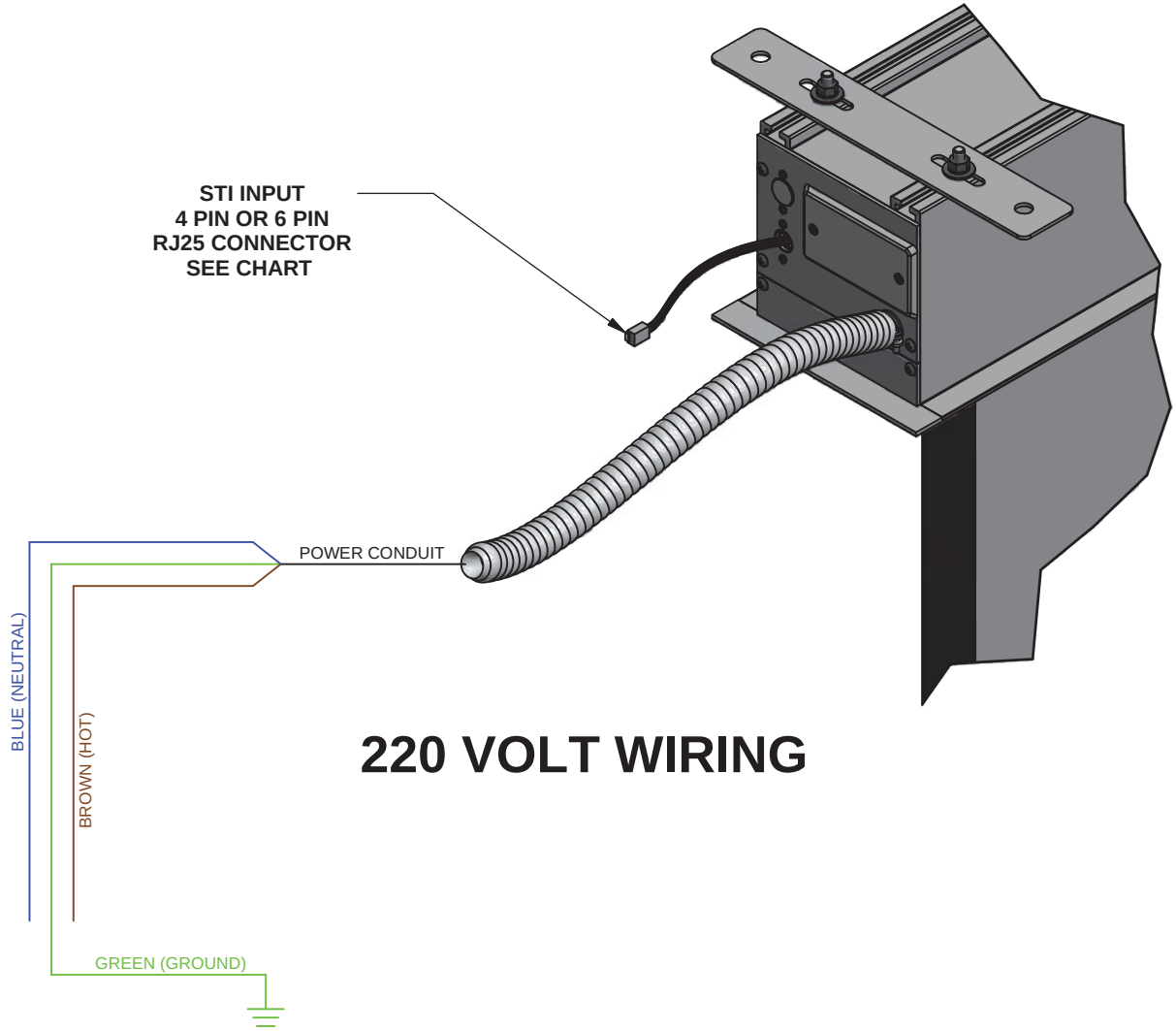

220 VOLT WIRING

DIMENSIONS ARE **Inches [mm]**	DRAWN BY: Engineering	**Stewart** FILMSCREEN 1161 W. Sepulveda Blvd., Torrance, CA 90502 Customer Care (800) 762-4999 Fax (310) 326-6870
TOLERANCES: +/- 1/8 in (UNLESS OTHERWISE SPECIFIED)	DRAWING TYPE: Typical	
APPROXIMATE SCREEN WEIGHT: 70 LBS	CREATION DATE: 8/18/15	TITLE: CIMA NON-TENSIONED ABOVE CEILING
APPROXIMATE SHIPPING WEIGHT: 158 LBS		
MODEL #: CINTAC164DEST10W-2-2-2		
CASE COLOR: White	SIZE: A / SHEET: 6 OF 6	PART NO.: 0095X / REV.

RESTRICTION: The information contained in the proposal is confidential and proprietary to Stewart Filmscreen Corporation, shall not be disclosed beyond the vendor company, and shall not be duplicated, used, or disclosed inwhole or in part for any purpose except to evaluate this proposal.

THIS DOCUMENT IS PROPRIETARY PROPERTY OF STEWART FILMSCREEN CORPORATION AND SHALL NOT BE DUPLICATED OR DISCLOSED WITHOUT WRITTEN PERMISSION
(C) STEWART FILMSCREEN CORPORATION 2011